Spectra® Enhanced Series IP PTZ Domes

HIGH-SPEED PTZ, 30X, FULL HD, WDR, LOW-LIGHT PERFORMANCE

Product Features

- SureVision 3.0 Technology, Including:
  - 130 dB Wide Dynamic Range (WDR)
  - Advanced Low Light Down to 0.03 LUX on Select Models
  - Anti-Bloom Technology, 3D Noise Filtering
  - Enhanced Tone Mapping
- Up to Full HD 1080p and up to 60 Images per Second (ips)
- Power over Ethernet (HPoE and PoE+), 24 VAC, 24 VDC
- Pelco H.264 Smart Compression Technology
- Three Automatic Defog Options
- Electronic Image Stabilization (EIS)
- Built-in Analytics Suite
- Vandal Resistant IK10 Smoked or Clear Bubble
- SD Card Slot with Support for SDXC Cards
- Compatible with Pelco and Third-Party Video Systems
- ONVIF Profile S, Profile G, and Profile Q Conformant

- 3-Year Warranty and Support
- Country of Origin: US

Top of the Line IP Performance

Pelco's Spectra® Series of high speed PTZ domes provide top tier image quality and performance. They include valuable embedded features that enhance the value of the product. Low latency video and control make the camera incredibly easy to use.

Full High Definition SureVision 3.0 Cameras

Spectra Enhanced has long provided Full HD 1080p 30x optical zoom cameras that run at up to 60 frames per second and provide 130dB of True Wide Dynamic Range (WDR). With Pelco's latest product evolution a powerful new camera option is now available that features the same powerful WDR capabilities as before but now with the addition of Pelco's latest SureVision 3.0 low light performance. In addition to 130dB of True WDR SureVision 3.0 adds a new level of low light performance that is up to twenty times better than base Spectra Enhanced models. The new SureVision 3.0 camera is available in 30x optical zoom models.

Embedded Features

Included in all models are a full suite of built in video analytics including: Abandoned Object, Adaptive Motion Detection, AutoTracker, Camera Sabotage, Directional Motion, Loitering Detection, Object Counting, Object Removal, and Stopped Vehicle. Spectra Enhanced also allows for up to 32 window blanking privacy zones that are configurable with custom blurring options. Three levels of Image Defog provide options for enhancing the image on foggy or rainy days. Five White Balance modes are available for overcoming difficult lighting conditions day and night. A Vivid Imaging mode can be enabled to automatically increases color saturation and sharpening. Spectra Enhanced supports up to 2TB of onboard local storage (not supplied) that is easily accessible through the ONVIF Profile G protocol or FTP.

Intuitive Design

Spectra Enhanced features the same ease of installation and maintenance that you have come to expect from Spectra. Each dome system consists of a back-box, a dome drive, and an IK10 rated lower dome. There is a choice of five form factors: in-ceiling, environmental in-ceiling, pendant, environmental pendant, and stainless steel environmental pendant.

VMS Integration

Spectra Enhanced easily connects to Pelco IP and hybrid video systems such as VideoXpert, Endura 2.0 (or later), and Digital Sentry 7.3 (or later). The camera is also compatible with Digital Sentry NVS (DS NVS), a full-featured video management software, which is available as a free download at www.pelco.com. DS NVS includes four free Pelco IP licenses and allows for the management of video from up to 64 cameras.

Pelco endeavors to be the most open and integrated camera provider in the industry and as a part of that effort Spectra Enhanced is integrated with a long and ever-growing list of 3rd party software and Video Management Systems (VMS).

BACK BOX FEATURES

NOTE: VALUES IN PARENTHESES ARE INCHES; ALL OTHERS ARE CENTIMETERS.

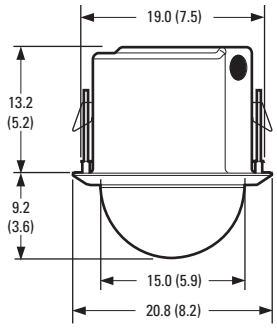

In-Ceiling (Indoor)

- Single Back Box for Suspended or Hard Ceiling Applications with Light Gray Trim Ring, RAL9002
- Requires 13.35 cm (5.25 in.) Space Above Ceiling and 8.25 cm (3.25 in.) Below
- Minimum Ceiling Thickness 1.27 cm (0.50 in.); Maximum 4.45 cm (1.75 in.)
- Aluminum Construction, IK10 Rated Nylon Bubble
- Suitable for Use in Environmental Air Handling Spaces
- 0° to 50°C (–32° to 122°F) Sustained Operating Temperature

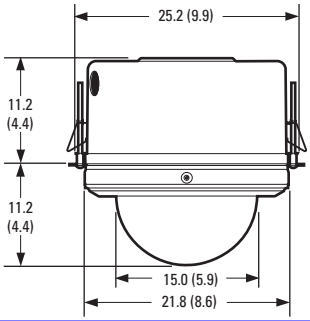

Environmental In-Ceiling

- Single Back Box, RAL9011, for Hard Ceiling Applications
- Requires 11.18 cm (4.40 in.) Space Above Ceiling;10.92 cm (4.30 in.) Below
- Type 4X and IP66
- Includes Heater and Blower
- Minimum Ceiling Thickness 1.27 cm (0.50 in.); Maximum 4.45 cm (1.75 in.)
- Aluminum Construction, IK10 Rated Nylon Bubble
- –45° to 60°C (–50° to 140°F) Sustained Operating Temperature

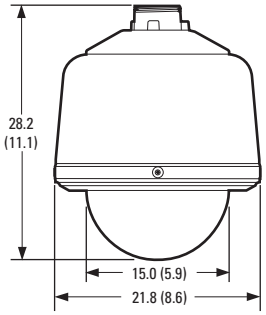

Standard Pendant

- Standard Pendant Available in Black or Light Gray Finish, RAL9002
- Aluminum Construction, IK10 Rated Nylon Bubble
- Uses 1 1/2-inch NPT Thread
- –5° to 50°C (–23° to 122°F) Sustained Operating Temperature

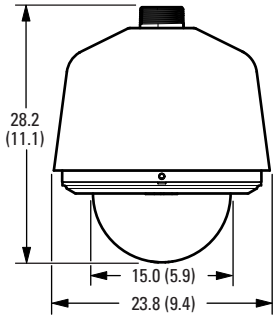

Environmental Pendant

- Environmental Pendant Available in Light Gray Finish, RAL9002
- Aluminum Construction, IK10 Rated Nylon Bubble
- Type 4X and IP66
- Uses 1 1/2-inch NPT Thread
- Includes Sun Shield, Heater, and Blower
- –45° to 60°C (–50° to 140°F) Sustained Operating Temperature

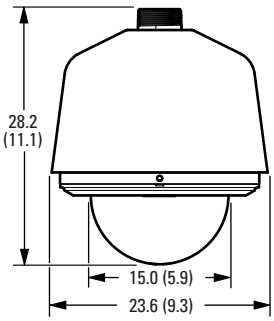

Stainless Steel Environmental Pendant

- Stainless Steel Environmental Pendant Available in Light Gray Finish, RAL9002
- All Stainless Steel Construction, IK10 Rated Nylon Bubble
- Type 4X and IP66
- Uses 1 1/2-inch NPT Thread
- Includes Sun Shield, Heater, and Blower
- –45° to 60°C (–50° to 140°F) Sustained Operating Temperature

TECHNICAL SPECIFICATIONS

CAMERA/OPTICS

Specification		30X Low Light
Sensor Type		1/2.8-inch Type Exmor CMOS Sensor
Optical Zoom		30X
Digital Zoom		12X
Maximum Resolution		1920 x 1080
Lens		f/1.6 ~ f/4.7, focal length 4.3 mm (wide) ~ 129.0 mm (tele)
Horizontal Angle of View		63.7° wide - 2.3° tele
Aspect Ratio		16:9
Light Sensitivity	Color (33 ms)	0.03 lux
	Color (250 ms)	0.008 lux
	Mono (33 ms)	0.004 lux
	Mono (250 ms)	0.001 lux
		Note: Sensitivity in lux for 90% reflectance, f/1.6 (wide angle), 50 dB gain at 30 IRE (30% of signal level) with Sensitivity Boost OFF; 4X improvement to sensitivity with Sensitivity Boost ON
Day/Night Capabilities		Yes
Shutter Range		1/1 ~ 1/10,000 sec
Signal-to-Noise Ratio		>50dB
IR Cut Filter		Yes
Wide Dynamic Range		130 dB
Iris Control		Auto iris with manual override
Backlight Compensation		Yes
Automatic Gain Control		Yes
Active Noise Filtering		3D Noise Filtering
Electronic Image Stabilization (EIS)		Yes

SOFTWARE FEATURES

- 256 presets
- 16 tours
- ±0.1° preset accuracy
- 8 configurable scans
- Patterns–8 recordable patterns (up to 5 minutes each)
- Multilingual menus (English, Spanish, Portuguese, Italian, German, French, Russian, Turkish, Arabic, Simplified Chinese, and Korean)
- Password protection
- 32 window blanks, configurable in size, with 5 window blur options
- "Auto Flip" feature rotates dome 180° at bottom of tilt travel
- Configurable park with actions
- Proportional pan/tilt continually decreases pan/tilt speeds in proportion to depth of zoom
- Pelco analytics including nine user-configurable behaviors
- Image Defog modes

PELCO ANALYTICS BEHAVIORS

Spectra Enhanced includes nine user-configurable behaviors. The camera is capable of running up to three behaviors simultaneously; although, the number of behaviors is limited to the available processing power of the camera and the type of analytic being used.

- **Abandoned Object:** Detects objects placed within a defined zone and triggers an alarm if the object remains in the zone longer than the user-defined time allows. An airport terminal is a typical installation for this behavior. This behavior can also detect objects left behind at an ATM, signaling possible card skimming.
- **Adaptive Motion Detection:** Detects and tracks objects that enter a scene and then triggers an alarm when the objects enter a user-defined zone. This behavior is primarily used in outdoor environments with light traffic to reduce the number of false alarms caused by environmental changes.
- **AutoTracker:** Detects and tracks movement in the field of view. When the AutoTracker behavior is configured, the system automatically pans and tilts to follow the moving object until the object stops or disappears from the monitored area.
- **Camera Sabotage:** Detects contrast changes in the field of view. An alarm is triggered if the lens is obstructed by spray paint, a cloth, or a lens cap. Any unauthorized repositioning of the camera also triggers an alarm.
- **Directional Motion:** Generates an alarm in a high traffic area when a person or object moves in a specified direction. Typical installations for this behavior include an airport gate or tunnel where cameras can detect objects moving in the opposite direction of the normal flow of traffic or an individual entering through an exit door.
- **Loitering Detection:** Identifies when people or vehicles remain in a defined zone longer than the user-defined time allows. This behavior is effective in real-time notification of suspicious behavior around ATMs, stairwells, and school grounds.
- **Object Counting:** Counts the number of objects that enter a defined zone. This behavior can be used to count the number of people at a store entrance/exit or inside a store where the traffic is light. This behavior is based on tracking and does not count people in a crowded setting.
- **Object Removal:** Triggers an alarm if an object is removed from a user-defined zone. This behavior is ideal for customers who want to detect the removal of high value objects, such as painting from a wall or a statue from a pedestal.
- **Stopped Vehicle:** Detects vehicles stopped near a sensitive area longer than the user-defined time allows. This behavior is idea for airport curbside drop-offs, parking enforcement, suspicious parking, traffic lane breakdowns, and vehicles waiting at gates.

TECHNICAL SPECIFICATIONS

VIDEO

Video Encoding	H.264 High, Main, or Base profiles and MJPEG
Video Streams	Up to 2 simultaneous streams; the second stream is variable based on the setup of the primary stream
Frame Rate	Up to 60, 50, 30, 25, 20, 15, 12.5, 10, 8.333, 7.5, 6, 5, 3, 2.5, 2, 1 (depending on the coding, resolution, and stream configuration)

Available Resolutions

Resolution				H.264 High Profile (IP GOP structure)	
MPx	**Width**	**Height**	**Aspect Ratio**	**Maximum IPS**	**Recommended Bit Rate (Mbps)**
2.07	1920	1080	16:9	60	8.00
2.07	1920	1080	16:9	30	6.05
0.92	1280	720	16:9	30	3.00
0.36	800	448	16:9	30	2.00
0.23	640	352	16:9	30	1.80
1.23	1280	960	4:3	30	3.80
0.49	800	608	4:3	30	2.00
0.31	640	480	4:3	30	1.45
0.08	320	240	4:3	30	0.50

NETWORK

Supported Protocols	TCP/IP, UDP/IP (Unicast, Multicast IGMP), UPnP, DNS, DHCP, RTP, RTSP, NTP, IPv4, IPv6*, SNMP v2c/v3, QoS, HTTP, HTTPS, SSH, SSL, SMTP, FTP, 802.1x (EAP), and NTCIP 1205
Users	
Unicast	Up to 20 simultaneous users depending on resolution settings (2 guaranteed streams)
Multicast	Unlimited users H.264
Security Access	Password protected
Software Interface	Web browser view and setup
Pelco System Integration	Endura 2.0 (or later) Digital Sentry 7.3 (or later)
Open API	Pelco API or ONVIF Profile S, G, and Q
Mobile Application	Integrated to Pelco Mobile App
Video Motion Detection	Simple motion detection and camera sabotage
Local Storage	SD card slot with support for SDXC cards Capture 1–5–10 second video clips on camera sabotage, motion detection, or alarm input; record video continuously in the case of network outage with option to overwrite; access video through FTP protocol and ONVIF Profile G

MINIMUM SYSTEM REQUIREMENTS

Processor	Intel® Core™ i3 Processor, 2.4 GHz
Operating System	Windows® 7 (32-bit and 64-bit) with DirectX® 11, Windows XP Service Pack 3 with DirectX 9.0c, or Mac® OS X 10.4 (or later)
Memory	4 GB RAM
Network Interface Card	100 megabits (or greater)
Monitor	Minimum of 1024 x 768 resolution, 16- or 32-bit pixel color resolution
Web Browser	Internet Explorer® 8.0(or later) or Firefox 3.5 (or later); Internet Explorer 8.0 (or later) is recommended for configuring analytics

ANALYTICS

Required Systems for Pelco Analytics

Pelco Interface	WS5200 Advanced System Management Software on an Endura 2.0 (or later) system
Open API	The Pelco API can transmit behavior alarm data to third-party applications, available at *pdn.pelco.com*

GENERAL

Construction		
Back Box	Aluminum	
Dome Drive	Aluminum, thermo plastic	
Lower Dome	Nylon	
Stainless Steel Construction		
Back Box	316 stainless steel; gray, polyurethane powder coated finish	
Lower Dome	316 stainless steel; black, polyurethane powder coated finish	
Bubble	Nylon, clear or smoked	
Light Attenuation		
Smoked	f/0.5 light loss	
Clear	f/0.0 light loss	
Cable Entry (back box)		
In-Ceiling	0.75-inch conduit fitting	
Pendant	Through 1.5-inch NPT pendant mount	
Weight (approximate)	Unit	Shipping
In-Ceiling	2.6 kg (5.7 lb)	4.6 kg (10.2 lb)
Environmental In-Ceiling	2.9 kg (6.5 lb)	4.9 kg (10.8 lb)
Standard Pendant	3.1 kg (6.8 lb)	5.0 kg (11 lb)
Environmental Pendant	3.7 kg (8.2 lb)	5.5 kg (12.2 lb)
Stainless Steel Environmental Pendant	6.5 kg (14.3 lb)	8.6 kg (19 lb)
Effective Projected Area (EPA)	20.5 square inches (without mount), 47 square inches (with IWM Series mount)	

ALARM

Unsupervised	Detects open or closed alarm state
Supervised	Detects open and short alarm state with external 1-kohm resistor
Input	3.5 VDC maximum, 3.5 mA maximum
Relay Output	±32 VDC maximum, 150 mA maximum

AUDIO

Input/Output	Line level/external microphone input; 600-ohm differential, 1Vp-p maximum signal level
Streaming	Embedded audio

* Supports mixed IPv4 and IPv6 installations, but not IPv6-only deployments.

† Pelco Media Player is recommended for control, smoothness, and reduced latency as compared to QuickTime.

TECHNICAL SPECIFICATIONS

OPERATING TEMPERATURE[1]

Temperature	Models				
			Environmental Pendant and In-Ceiling		
	In-Ceiling (24 VAC, PoE+)	Standard Pendant (24 VAC, PoE+)	24 VAC	HPoE[5]	PoE+
Maximum[2]	50°C (122°F)	50°C (122°F)	60°C (140°F)	60°C (140°F)	60°C (140°F)
Minimum[2]	0°C (32°F)	–5°C (23°F)	–51°C (–60°F)	–45°C (–49°F)	–20°C (–4°F)
Ice Free	N/A	N/A	–30°C (–22°F)	–30°C (–22°F)	–10°C (14°F)
Cold Start[3]	0°C (32°F)	0°C (32°F)	–40°C (–40°F)	–35°C (–31°F)	–10°C (14°F)
De-Icing[4]	N/A	N/A	–30°C (–22°F)	–30°C (–22°F)	N/A
Storage Temperature	–20°C to 60°C (–5°F to 140°F)				

[1] Assumes no wind chill factor.
[2] For outdoor applications.
[3] Cold starts within 90 minutes at specified temperature.
[4] Removes icing of 2.5 mm (0.1 in.) within 3 hours after power-up.
[5] PEO75U HPoE injector accessory required for heater operation.

OPERATING HUMIDITY

In-Ceiling (indoor), Standard Pendant	10 to 90% RH (noncondensing)
Environmental In-Ceiling, Environmental Pendant, Stainless Steel Environmental Pendant	10 to 100% RH (condensing)

MECHANICAL

(Dome Drive Only)

Variable Speed	0.1° to 80°/sec (manual pan speed)
Preset Accuracy	±0.1°
Pan Movement	360° continuous pan rotation
Vertical Tilt	+1° to –90°
Maximum Pan Speed	Up to 450° per second
Maximum Tilt Speed	Up to 450° per second
Manual Pan/Tilt Speeds	
Pan	0.1° to 80°/sec manual operation
Tilt	0.1° to 45°/sec manual operation
Preset Speeds	
Pan	450°/sec
Tilt	450°/sec

PELCO'S H.264 SMART COMPRESSION TECHNOLOGY

Pelco's H.264 Smart Compression Technology lowers bandwidth and storage requirements by up to 70%, while reducing storage requirements.

Pelco's Smart Compression Technology dynamically analyzes motion occurring within live video in real-time, to intelligently compress the information you don't need, while retaining details with clear quality in the areas that are important in the scene. By enabling Dynamic GOP, an added feature of Smart Compression, the number of I-frames are automatically reduced in scenes with low motion. Based on the complexity of scenes and motion occurring, such as a store room that has limited entry and exit, up to 70% bandwidth savings can be achieved.

PELCO CAMERA LINK

Pelco Camera Link technology brings together the best of two flagship Pelco products: You get the seamless and continual situational awareness of Optera across a wide space along with the ability to automatically zoom in for great detail with nearby Spectra Enhanced and follow people and vehicles closely.

TECHNICAL SPECIFICATIONS

ELECTRICAL

Ports	RJ-45 connector for 100Base-TX Auto MDI/MDI-X Autonegotiate/manual setting
Cabling Type	Cat5e or better for 100Base-TX
Input Voltage	18 to 32 VAC; 24 VAC nominal 22 to 27 VDC; 24 VDC nominal
Input Power	
24 VAC	1 A (24 VA) maximum (without heater and blower); 3 A (72 VA) maximum (with heater and blower)
24 VDC	1 A (24 W) maximum (without heater and blower); 3 A (72 W) maximum (with heater and blower)
PoE+	18 W, Environmental models (with heater off, blower on);* 15 W, Non-Environmental (with heater and blower off)
HPoE	60 W, Environmental models (with heater and blower on);† 15 W, Non-environmental (with heater and blower off)

*Heater is disabled with PoE+ power selection.

†Only 27 W of power is supplied to the heater.

CERTIFICATIONS/RATINGS/PATENTS

- CE, Class A
- FCC, Class A
- ICES-003, Class A
- UL/cUL Listed
- C-Tick
- NEMA TS-2 (Temp.) para 2.2.7.3 - 2.2.7.7
- KC
- ONVIF Profile S
- ONVIF Profile G
- ONVIF Profile Q
- Cisco® Medianet Media Services Proxy 2.0 compatible
- Environmental models, including stainless steel, were tested in accordance with:
  – IEC 60068-2-1, IEC 60068-2-2, IEC 60068-2-14, IEC 60068-2-30, and IEC 60068-2-78
- Environmental pendants, including stainless steel, were tested in accordance with:
  – IEC 60068-2-6 and IEC 60068-2-27
- Environmental models meet NEMA Type 4X and IP66 standards when installed properly (B6-F-E, B6-PG-E, and B6-PSG-E)
- U.S. Patents 5,931,432; 6,793,415 B2; 6,802,656 B2; 6,821,222 B2; 7,161,615 B2
- IK10 impact-resistant bubble on all models were tested in accordance with:
  – IEC 62262

TECHNICAL SPECIFICATIONS

SYSTEM MODEL NUMBERS

Type	Back Box Color	Lower Dome	Spectra Enhanced Low Light, 2.0 MPx, 30X
In-ceiling, indoor	White with white trim ring	Smoked	S6230-FWL0US
		Clear	S6230-FWL1US
In-ceiling, environmental	Black with black trim ring	Smoked	S6230-YBL0US
		Clear	S6230-YBL1US
Pendant, standard	Gray	Smoked	S6230-PGL0US
		Clear	S6230-PGL1US
	Black	Smoked	S6230-PBL0US
		Clear	S6230-PBL1US
Pendant, environmental	Gray	Smoked	S6230-EGL0US
		Clear	S6230-EGL1US
Pendant, environmental, stainless steel	Gray	Smoked	S6230-ESGL0US
		Clear	S6230-ESGL1US

COMPONENT MODEL NUMBERS

Back Box	
B6-F	In-ceiling
B6-F-E	In-ceiling, environmental
B6-PG	Pendant, gray
B6-PB	Pendant, black
B6-PG-E	Pendant, gray, environmental
B6-PSG-E	Pendant, gray, environmental, stainless steel

High Definition (HD) Lower Dome*	
LD6F-0	IK10, In-ceiling, smoked
LD6F-1	IK10, In-ceiling, clear
LD6PB-0	IK10, Pendant, smoked
LD6PB-1	IK10, Pendant, clear
LD6SS-0	IK10, Pendant, smoked, stainless steel
LD6SS-1	IK10, Pendant, clear, stainless steel

Dome Drive	
D6230L	30X

*Use the pendant lower domes with the environmental in-ceiling and environmental pendant back boxes.

RECOMMENDED MOUNTS

Pendant Domes

IWM-GY	Wall mount, gray finish; can be adapted for corner, parapet, or pole application
IWM24-GY Series	Wall mount, with integral 24 VAC, 100 VA transformer; gray finish; can be adapted for corner, parapet or pole application
PP350/PP351	Parapet wall/roof mount
SWM Series	Compact wall mount, black or gray finish; can be adapted for corner or pole applications

WIND SPECIFICATIONS

Full Motion Control	0 to 130 knots (150 mph/241 kmh)

OPTIONAL ACCESSORIES

POE1AT-US	PoE+ Injector† with US power cord
POE1AT-EU	PoE+ Injector† with EU power cord
POE90U1BT-EUK	90W HPoE 802.3BT single port injector EU and UK power cord included
POE90U1BT-US	90W HPoE 802.3BT single port injector US power cord included
POE90U1BT	90W HPoE 802.3BT single port injector power cord not included
MCS Series	Indoor, 24 VAC power supply
WCS Series	Outdoor, 24 VAC power supply

In-Ceiling Domes

SD5-P	2′ x 2′ ceiling panel, aluminum construction; replaces 2′ x 2′ ceiling tile
SCA1	Support rails for B6-F; for use in ceiling tile applications

Refer to individual power supply specifications for more information.

†PoE+ will not provide enough power for heater operation. Use the HPoE Injector to provide sufficient heater power.

Pelco, Inc.
625 W. Alluvial, Fresno, California 93711 United States
USA & Canada Tel (800) 289-9100 Fax (800) 289-9150
International Tel +1 (559) 292-1981 Fax +1 (559) 348-1120
www.pelco.com

Pelco, the Pelco logo, and other trademarks associated with Pelco products referred to in this publication are trademarks of Pelco, Inc. or its affiliates. ONVIF and the ONVIF logo are trademarks of ONVIF Inc. All other product names and services are the property of their respective companies.
Product specifications and availability are subject to change without notice.
©Copyright 2018, Pelco, Inc. All rights reserved.